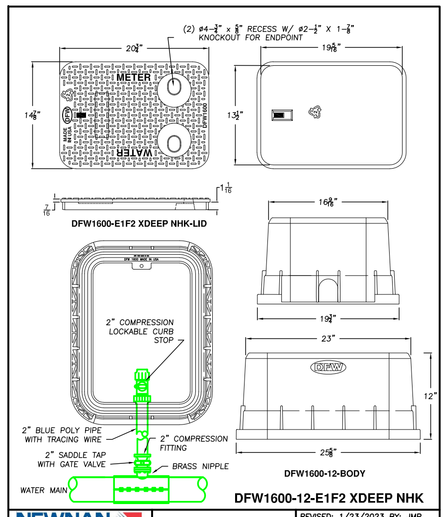

NEWNAN UTILITIES — Committed To Excellence

2" METER BOX AND WATER TAP	REVISED: 1/23/2023 BY: JMP
DRAWN BY: S. TOLAR	
INSPECTED BY:	

W-002

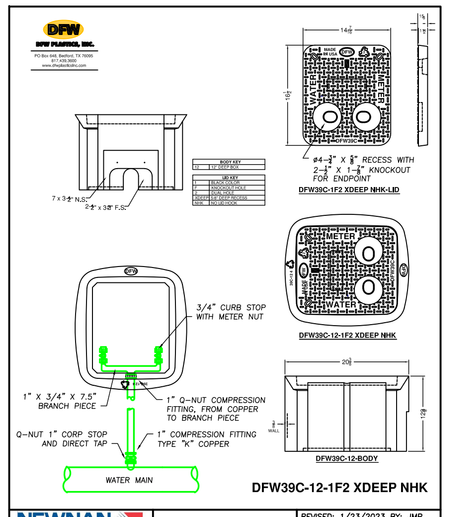

NEWNAN UTILITIES — Committed To Excellence

RESIDENTIAL WATER TAP METER BOX	REVISED: 1/23/2023 BY: JMP
DRAWN BY: S. TOLAR	
INSPECTED BY:	

W-003

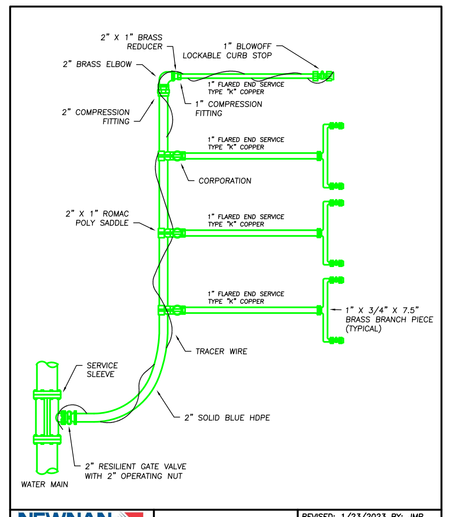

NEWNAN UTILITIES — Committed To Excellence

METER BANK DETAIL	REVISED: 1/23/2023 BY: JMP
DRAWN BY: J. PECCE	
INSPECTED BY:	

W-004

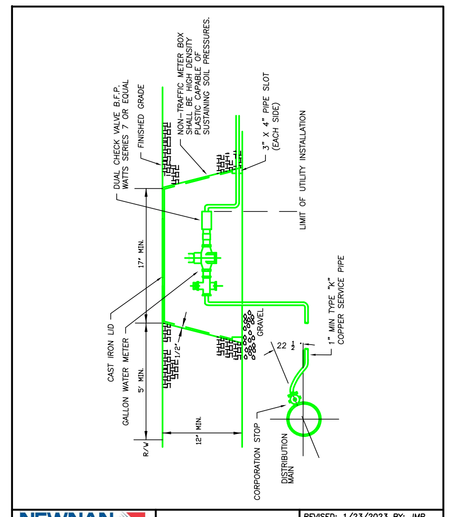

NEWNAN UTILITIES — Committed To Excellence

TYPICAL RESIDENTIAL WATER METER INSTALLATION	REVISED: 1/23/2023 BY: JMP
DRAWN BY: S. TOLAR	
INSPECTED BY:	

W-005

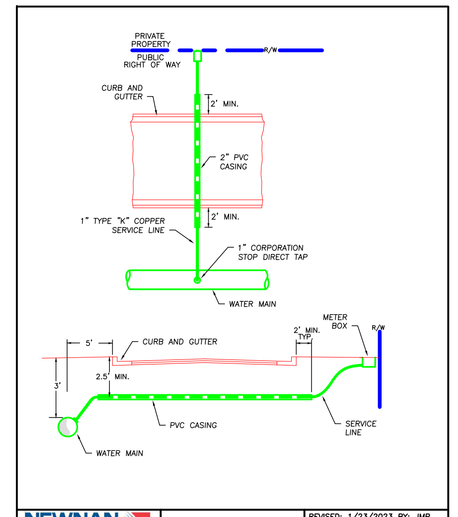

NEWNAN UTILITIES — Committed To Excellence

LONG SIDE WATER SERVICE DETAIL	REVISED: 1/23/2023 BY: JMP
DRAWN BY: S. TOLAR	
INSPECTED BY:	

W-010

TYPICAL UNDERGROUND INSTALLATION FOR DCVA SIZE 1/2" THROUGH 2"

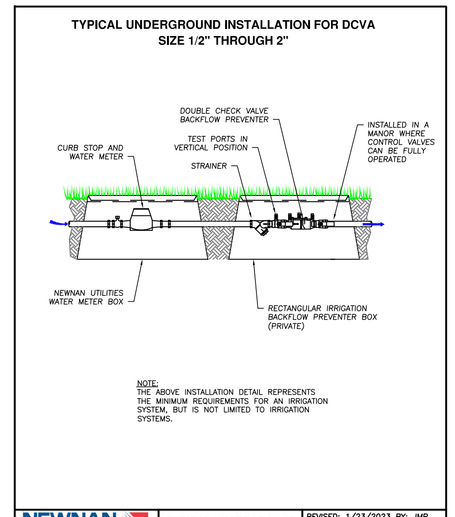

NOTE:
THE ABOVE INSTALLATION DETAIL REPRESENTS THE MINIMUM REQUIREMENTS FOR AN IRRIGATION SYSTEM, BUT IS NOT LIMITED TO IRRIGATION SYSTEMS.

NEWNAN UTILITIES — Committed To Excellence

TYPICAL UNDERGROUND INSTALLATION FOR DCVA - SIZES 1/2" THROUGH 2"	REVISED: 1/23/2023 BY: JMP
DRAWN BY: S. TOLAR	
INSPECTED BY:	

BF-001

TYPICAL ABOVE GROUND INSTALLATION FOR RPZ SIZE 1/2" THROUGH 2"

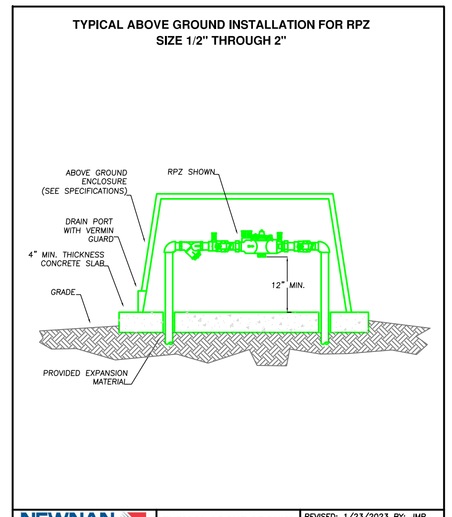

NEWNAN UTILITIES — Committed To Excellence

TYPICAL ABOVE GROUND INSTALLATION FOR RPZ - SIZES 1/2" THROUGH 2"	REVISED: 1/23/2023 BY: JMP
DRAWN BY: S. TOLAR	
INSPECTED BY:	

BF-002

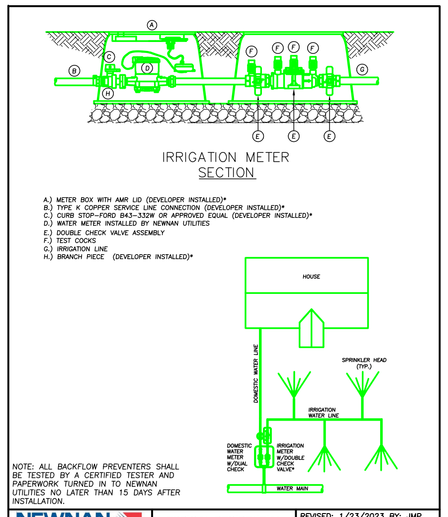

NOTE: ALL BACKFLOW PREVENTERS SHALL BE TESTED BY A CERTIFIED TESTER AND PAPERWORK TURNED IN TO NEWNAN UTILITIES NO LATER THAN 15 DAYS AFTER INSTALLATION.

NEWNAN UTILITIES — Committed To Excellence

TYPICAL RESIDENTIAL IRRIGATION AND DOMESTIC WATER METER INSTALLATION	REVISED: 1/23/2023 BY: JMP
DRAWN BY: JOE PELLETIER	
INSPECTED BY:	

BF-007

TRACER WIRE UTILITY MARKERS

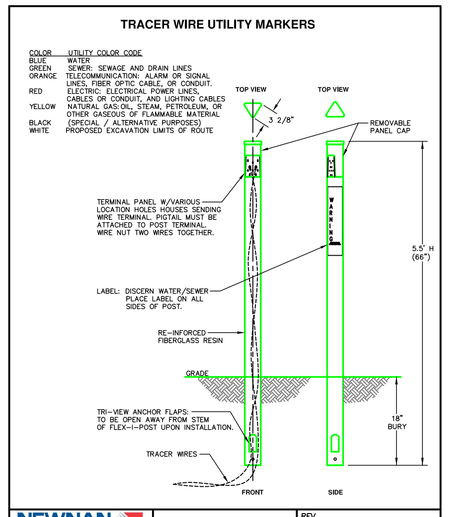

NEWNAN UTILITIES — Committed To Excellence

TRACER WIRE UTILITY MARKER	REV.
DRAWN BY: J. PECCE	
INSPECTED BY:	

S-005

SANITARY SEWER CLEAN-OUT DETAIL

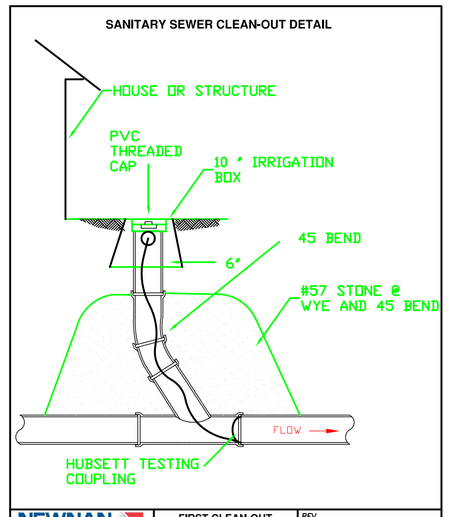

NEWNAN UTILITIES — Committed To Excellence

FIRST CLEAN-OUT OUTSIDE STRUCTURE FOR TESTING SANITARY SEWER DETAIL	REV.
DRAWN BY: S. TOLAR	
INSPECTED BY:	

S-005

SANITARY SEWER CLEAN-OUT DETAIL

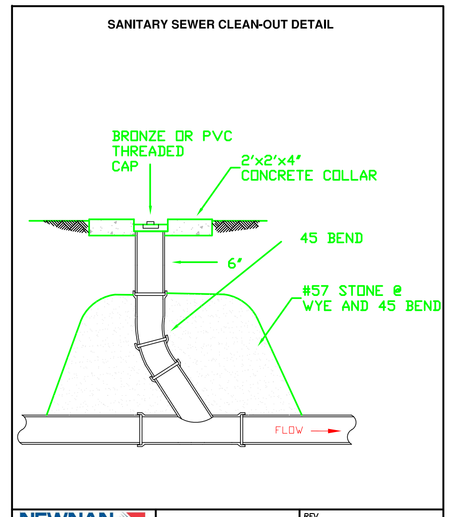

NEWNAN UTILITIES — Committed To Excellence

SANITARY SEWER CLEAN-OUT DETAIL	REV.
DRAWN BY: S. TOLAR	
INSPECTED BY:	

S-001

TRAFFIC CLEAN-OUT COVER

USF 7635 RING & FJ COVER

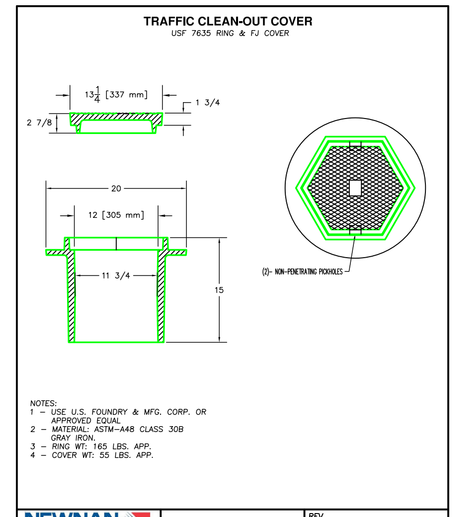

NOTES:
1 = USE U.S. FOUNDRY & MFG. CORP. OR APPROVED EQUAL
2 = MATERIAL ASTM-A48 CLASS 30B GRAY IRON.
3 = RING WT. 165 LBS. APP.
4 = COVER WT. 55 LBS. APP.

NEWNAN UTILITIES — Committed To Excellence

MANHOLE DETAIL 2	REV.
DRAWN BY: S. TOLAR	
INSPECTED BY:	

S-007

SANITARY SEWER STUB-OUT/ CLEAN-OUT DETAIL

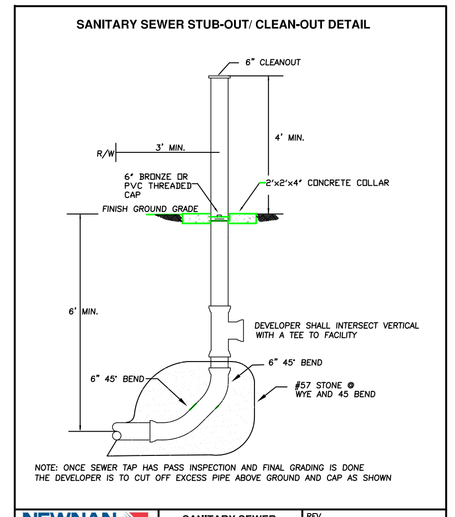

NOTE: ONCE SEWER TAP HAS PASS INSPECTION AND FINAL GRADING IS DONE THE DEVELOPER IS TO CUT OFF EXCESS PIPE ABOVE GROUND AND CAP AS SHOWN

NEWNAN UTILITIES — Committed To Excellence

SANITARY SEWER STUB-OUT/CLEAN-OUT ADJACENT TO R/W DETAIL	REV.
DRAWN BY: S. TOLAR	
INSPECTED BY:	

S-002

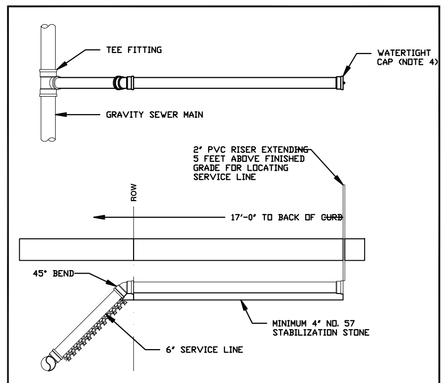

NOTES:
1. SERVICE LINES SHALL BE STUBBED OUT TO 17 FEET BEHIND THE BACK OF CURB AND SHALL BE NO MORE THAN 10 FEET DEEP.
2. A WATER TIGHT CAP SHALL BE INSTALLED ON THE END OF THE LINE.
3. SERVICE LINES HAVING LESS THAN 5 FEET OF COVER SHALL BE DUCTILE IRON PIPE.
4. PLUMBING CONTRACTOR SHALL TIE ON TO SERVICE LINE USING STANDARD PVC FITTINGS OR "DONUT" CONNECTION WITH GROUT.

HENRY COUNTY WATER AUTHORITY

SEWER SERVICE LINE LATERAL	REVISED09/19/2018
	SCALE: N.T.S.
	DETAIL NO. S18

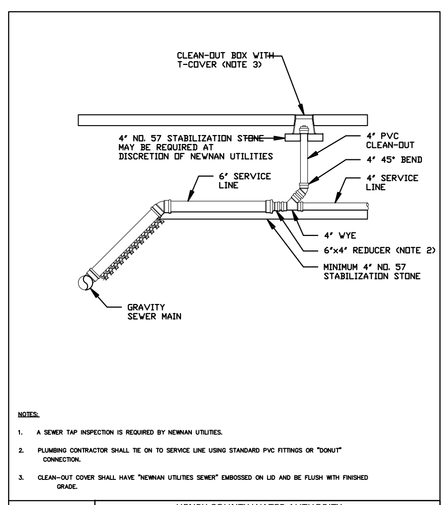

NOTES:
1. A SEWER TAP INSPECTION IS REQUIRED BY NEWNAN UTILITIES.
2. PLUMBING CONTRACTOR SHALL TIE ON TO SERVICE LINE USING STANDARD PVC FITTINGS OR "DONUT" CONNECTION.
3. CLEAN-OUT COVER SHALL HAVE "NEWNAN UTILITIES SEWER" EMBOSSED ON LID AND BE FLUSH WITH FINISHED GRADE.

HENRY COUNTY WATER AUTHORITY

SANITARY SEWER SERVICE LINE CLEAN-OUT CONNECTION	REVISED02/16/2018
	SCALE: N.T.S.
	DETAIL NO. S20

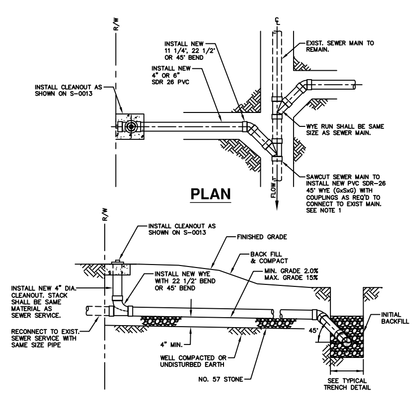

NOTES:
1. ALL NEW SEWER MAIN, LATERAL WYES AND SERVICE PIPE SHALL BE SDR-26 PVC UNLESS OTHERWISE DIRECTED BY THE ENGINEER.
2. CONSTRUCTION/REPAIR OF THE SEWER MAIN, LATERAL & CLEANOUT SHALL BE CONSTRUCTED JUST INSIDE R/W LINE.

TYPICAL SEWER SERVICE POINT REPAIR W/NEW MAIN WYE AND CLEANOUT

STREET REPAIR DETAIL

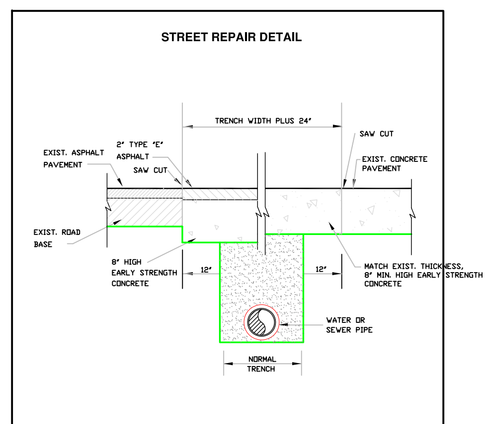

NOTES:
TRENCH TO BE BACKFILLED IN MAXIMUM 6" (LOOSE) LIFTS AND THOROUGHLY COMPACTED TO NOT LESS THAN 95% STANDARD PROCTOR DENSITY AT OPTIMUM MOISTURE BY METHODS SATISFACTORY TO THE COMMISSION.

NEWNAN UTILITIES — Committed To Excellence

STREET REPAIR DETAIL	REVISED: 1/23/2023 BY: JMP
DRAWN BY: S. TOLAR	
INSPECTED BY:	

PI-003

TYPICAL MANHOLE DROP CONNECTION

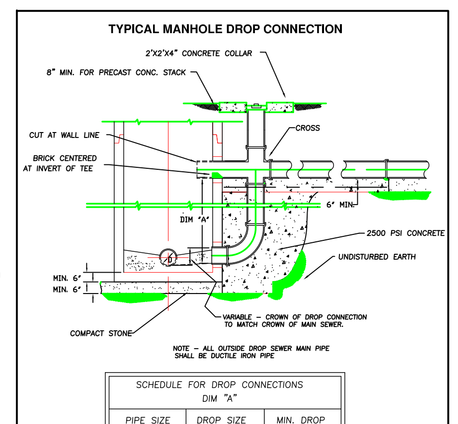

NOTE - ALL OUTSIDE DROP SEWER MAIN PIPE SHALL BE DUCTILE IRON PIPE

SCHEDULE FOR DROP CONNECTIONS
DIM "A"

PIPE SIZE	DROP SIZE	MIN. DROP
8"	8"	24"
10"	8"	24"
12"	10"	35"
15"	12"	37"
21"	18"	41"

NEWNAN UTILITIES — Committed To Excellence

TYPICAL MANHOLE DROP CONNECTION	REV.
DRAWN BY: S. TOLAR	
INSPECTED BY:	

S-003

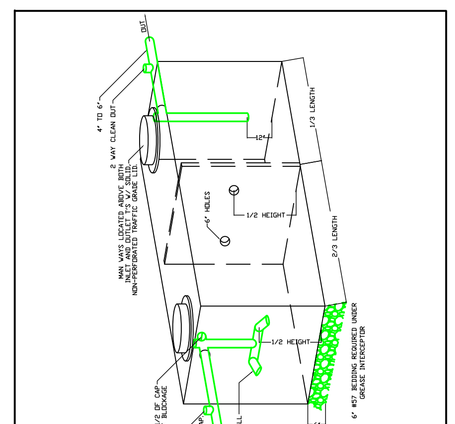

NEWNAN UTILITIES — Committed To Excellence

TYPICAL GREASE INTERCEPTOR DETAIL	REV.
DRAWN BY: S. TOLAR	
INSPECTED BY:	

G-001

REVISION	1/23/2023
REVISION	
REVISION	
REVISION	
REVISION	

NEWNAN UTILITIES STANDARD INSTALLATION DETAILS

NEWNAN, GEORGIA

NEWNAN UTILITIES — Committed To Excellence

SHEET NO.
1 OF 5

DATE: JANUARY 2023

SCALE:

DRAWN BY: JMP, ST

REVIEWED BY: SCOTT TOLAR

Ref: